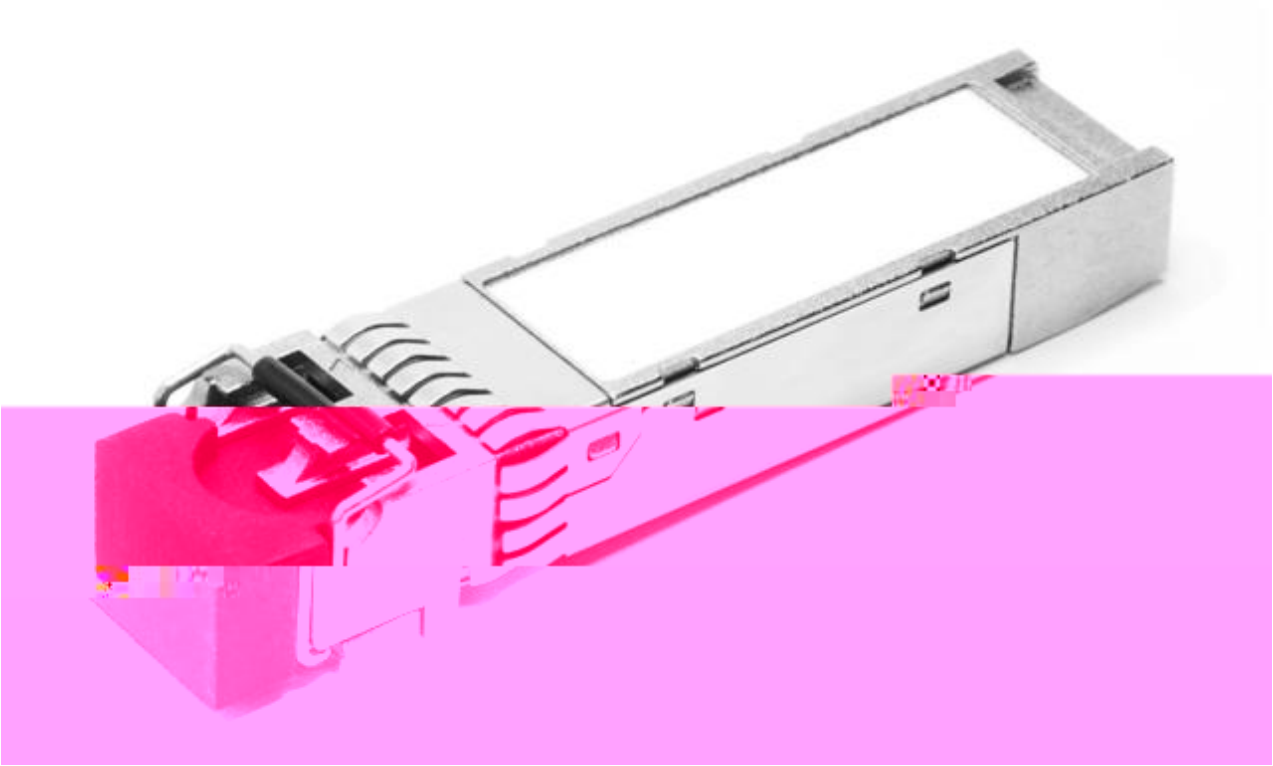

-
-
  -
  -
  -
  -
  -

-
-
-

-
-
-
-
-

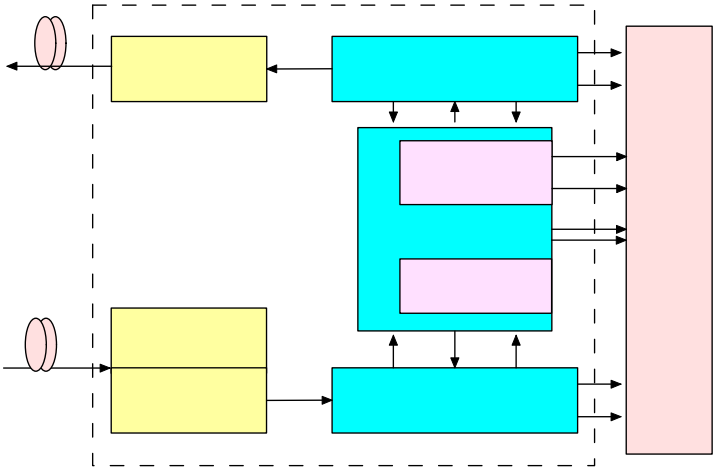

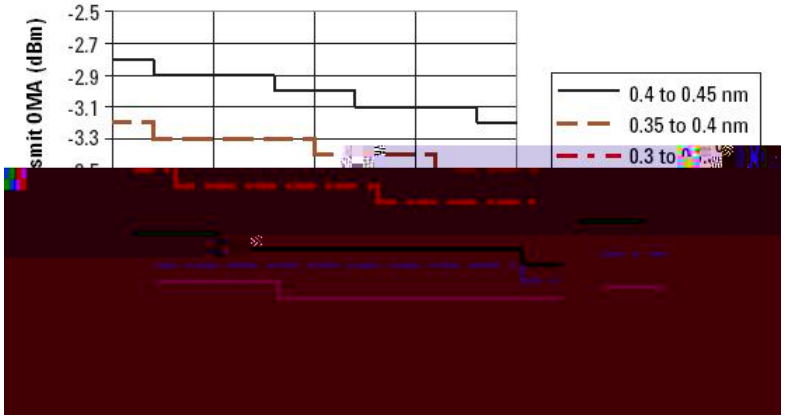
-2.5
-2.7
-2.9
-3.1
-3.3
smit OMA (dBm)
0.4 to 0.45 nm
0.35 to 0.4 nm
0.3 to

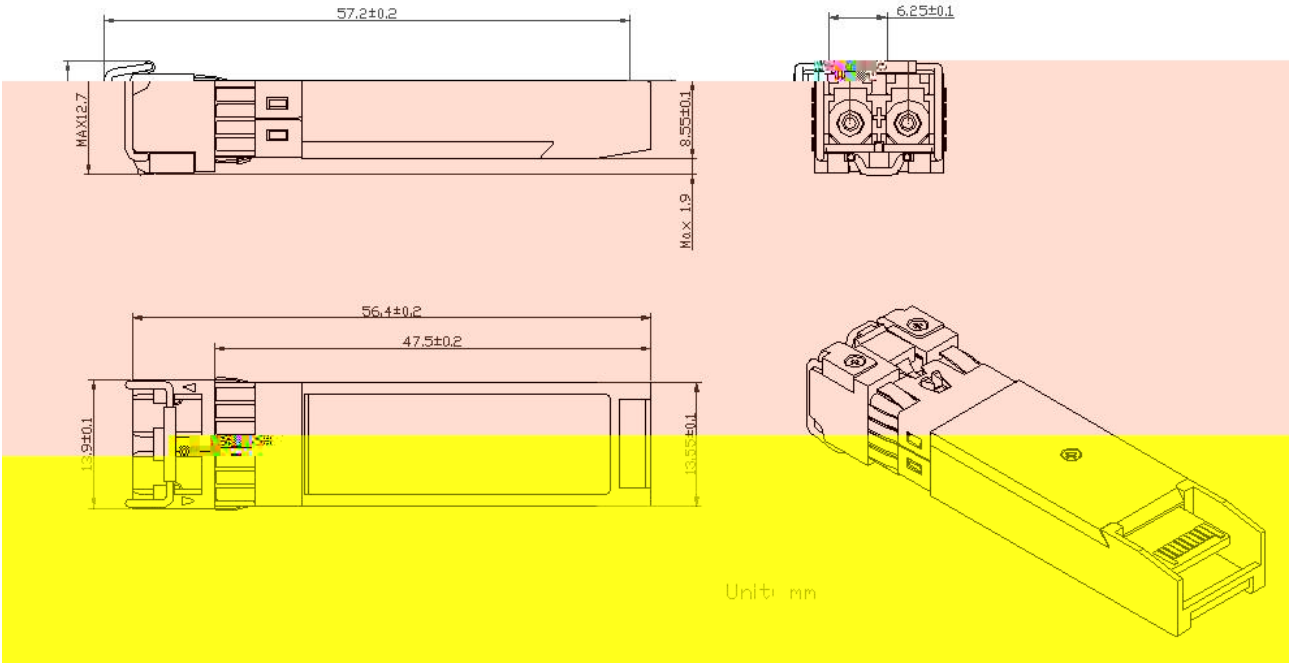
57.2±0.2
6.25±0.1
MAX12.7
8.55±0.1
Max 1.9
56.4±0.2
47.5±0.2
13.9±0.1
13.55±0.1
Unit: mm