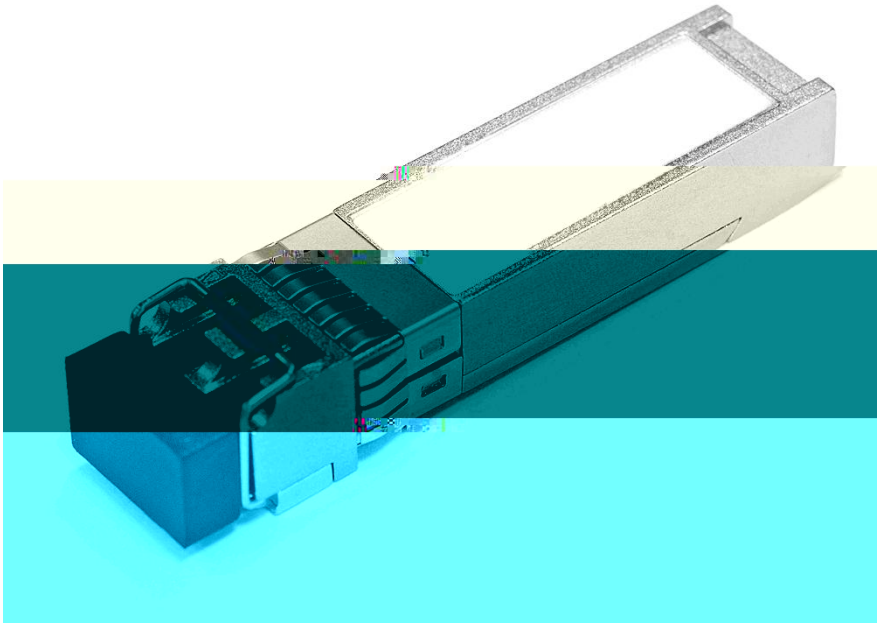

-
-
-
-
-
-
-
-
-
-

-
-

-
-
-

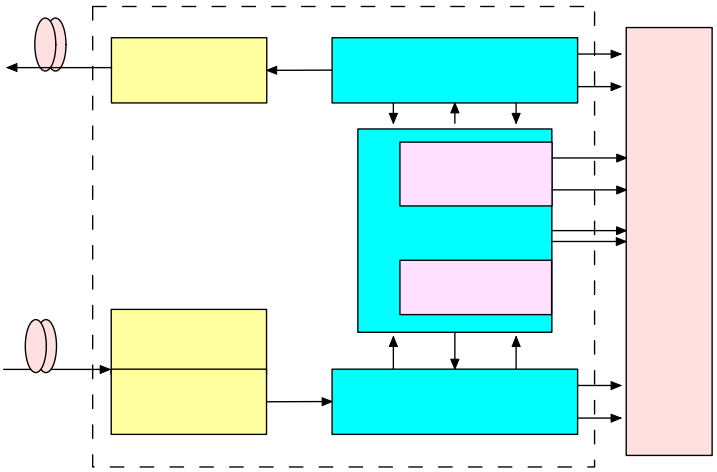

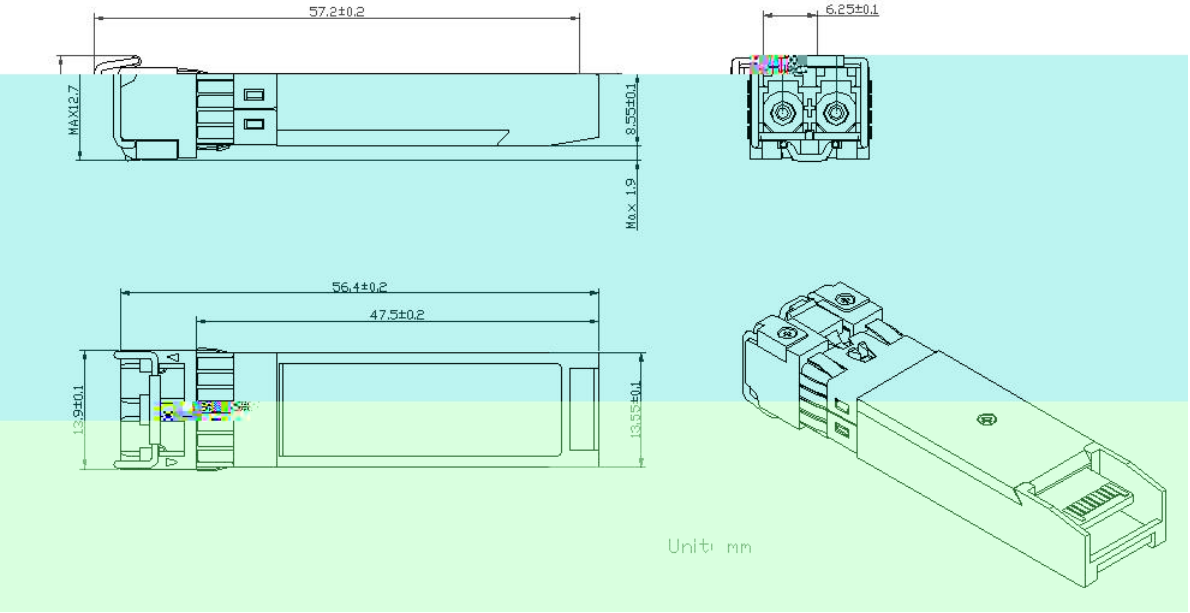
57.2±0.2
6.25±0.1
MAX12.7
8.55±0.1
Max 1.9
56.4±0.2
47.5±0.2
13.9±0.1
13.55±0.1
Unit: mm