Ordering Information

Absolute Maximum Ratings

Parameter	Symbol	Unit	Min	Max

Recommended Operating Conditions

Parameter	Symbol	Unit	Min	Typ	Max
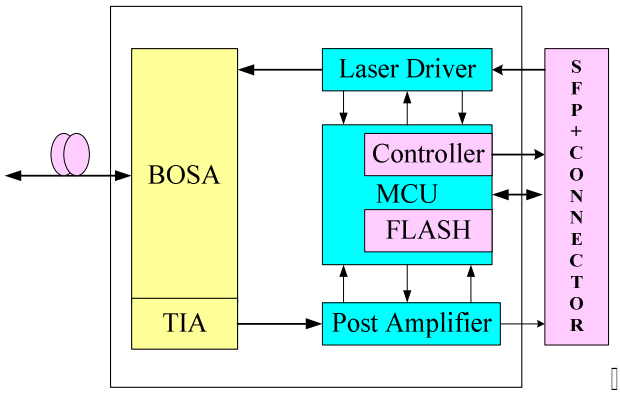
Principle diagram